16x1 Character **WH1601A**

Dimension drawing

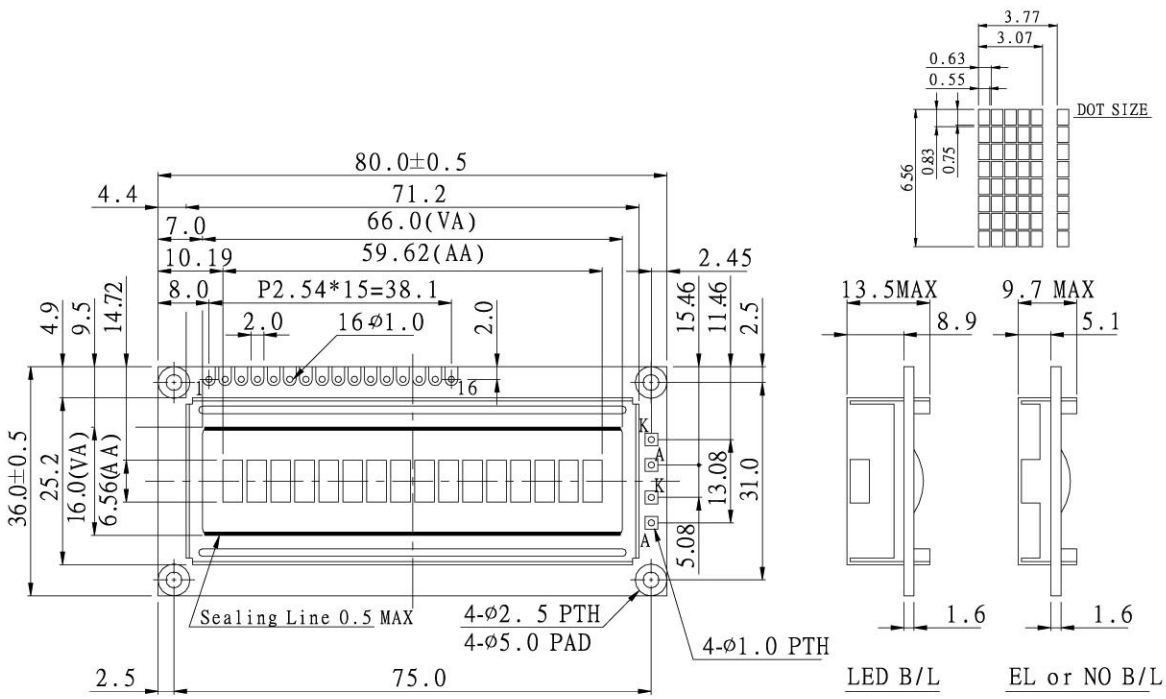

Character type

Feature

1. 5x8 dots includes cursor
2. Built- in controller (KS 0066 or Equivalent)
3. +5V power supply
4. 1/16 duty cycle
5. LED can be driven by pin1,pin2,pin15,pin16 or A and K
6. N.V. Optional
7. For +3V power supply

Pin NO.	Symbol	Function
1	Vss	GND
2	Vdd	+ 5V
3	Vo	Contrast Adjustment
4	RS	H/L Register select signal
5	R/$\overline{W}$	H/L Read / write signal
6	E	H→L Enable signal
7	DB0	H/L Data bus line
8	DB1	H/L Data bus line
9	DB2	H/L Data bus line
10	DB3	H/L Data bus line
11	DB4	H/L Data bus line
12	DB5	H/L Data bus line
13	DB6	H/L Data bus line
14	DB7	H/L Data bus line
15	A	+4.2V for LED (RA=OΩ)
16	K	Power supply for B/L (0V)

Mechanical Data

Item	Standard Value	Unit
Module Dimension	80.0x36.0	mm
Viewing Area	66.0x16.0	mm
Mounting hole	75.0x31.0	mm
Character Size	3.07x6.56	mm

Absolute Maximum Rating

Item	Symbol	Standard Value			Unit
		min.	typ.	max.	
Power Supply	VDD-VSS	-0.3	---	7.0	V
Input Voltage	VI	-0.3	---	VDD	V

Note : VSS=0 Volt, VDD=5.0 Volt.

Electronical Characteristics

Item	Symbol	Condition	Standard Value			Unit
			min.	typ.	max.	
Input Voltage	VDD	VDD=+5V	4.7	5.0	5.3	V
Supply Current	IDD	VDD=5V	---	1.2	1.4	mA
Recommended LC Driving Voltage for Normal Temp. Version module	VDD-V0	-20°C	4.9	5.1	5.5	V
		0°C	4.5	4.8	5.1	
		25°C	4.1	4.5	4.7	
		50°C	3.8	4.2	4.4	
		70°C	3.5	3.9	4.1	
LED Forward Voltage	VF	25°C	---	4.2	4.6	V
LED Forward Current	IF	25°C	---	130	260	mA
EL Power Supply Current	IEL	Vel=110VAC;400Hz	---	---	5.0	mA

Display Character Address Code :

Display position	1	2	3	4	5	6	7	8	9	10	11	12	13	14	15	16
DD RAM Address	00	01						07	40	41						47